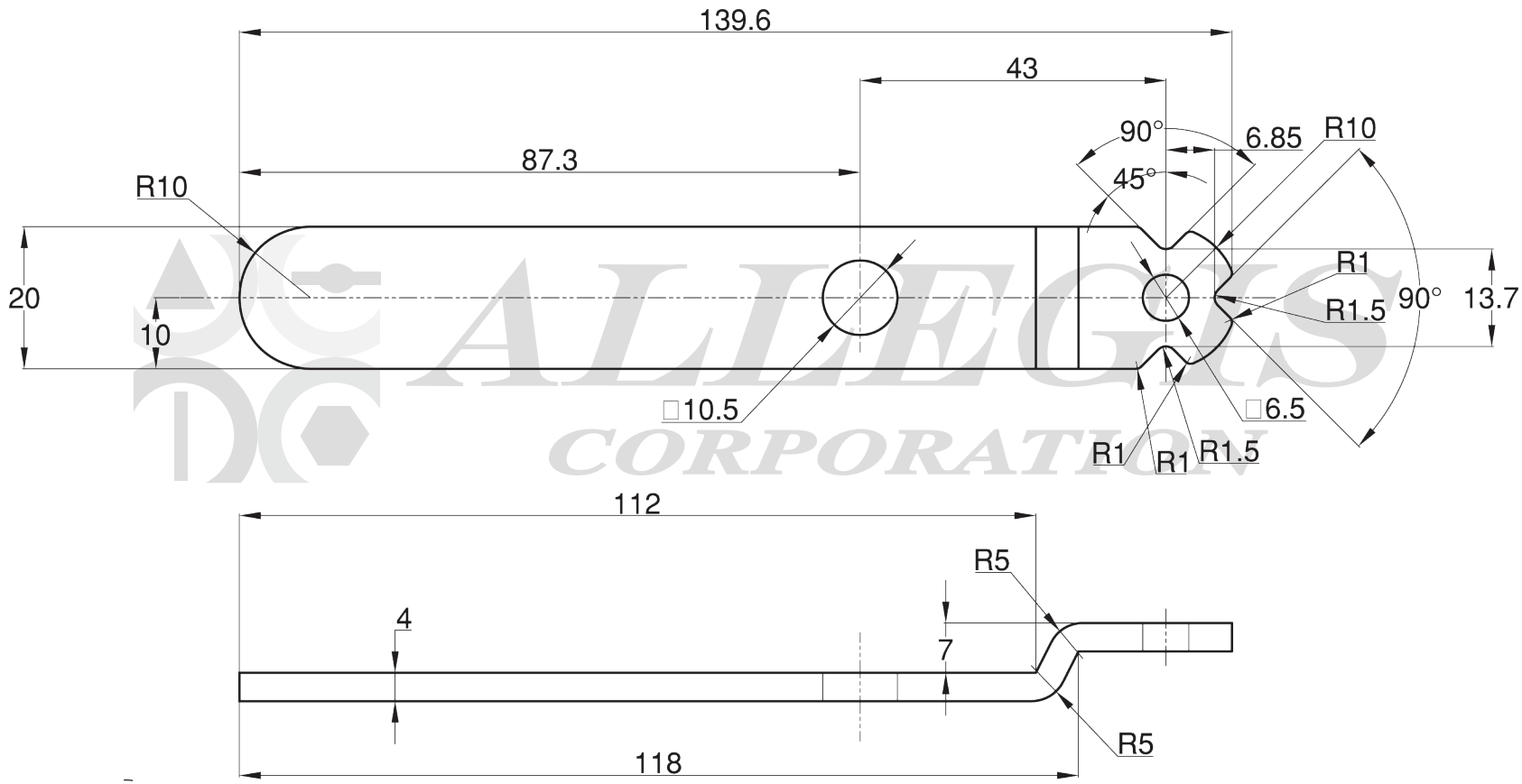

ALLEGIS CORPORATION

www.ALLEGISCORP.com ***1-866-378-7550***		MATERIAL / FINISH : Steel, Zinc plated	
REV. : 1 : 1	DATE : 1-10-2013	DESCRIPTION : K2 Security Handle	DRAWING NO. : 2651-904000